REVISIONS			
LTR	DESCRIPTION	DATE	APPROVED
-	Released	5/24/10	CDL

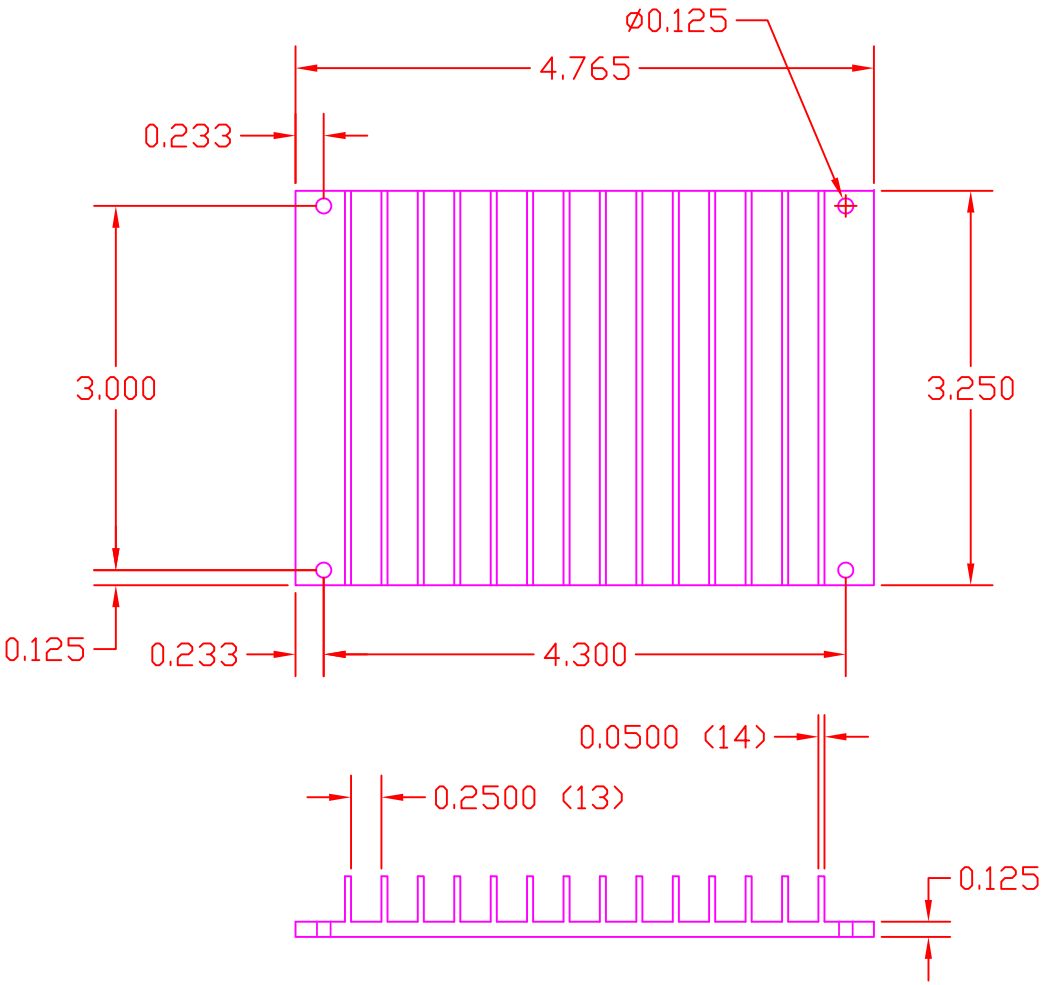

UNLESS OTHERWISE SPECIFIED
1.CAPACITANCE IN
2.RESISTANCE IN
3.DIMENSIONS IN INCHES
4.TOLERANCE
FRAC = .XX =
.XXX = ±.005 ANGLE =

MATERIAL

FINISH

STANDARD

APPROVAL

DWN	CDL 5/24/10	DATE
CHK		DATE
CH DR		DATE
ENG		DATE

American Power Design

TITLE

B OPTION HEATSINK

SCALE		NUMBER	REV.
NA	A	HS-B	

SHEET 1 OF 1

DO NOT SCALE PRINT