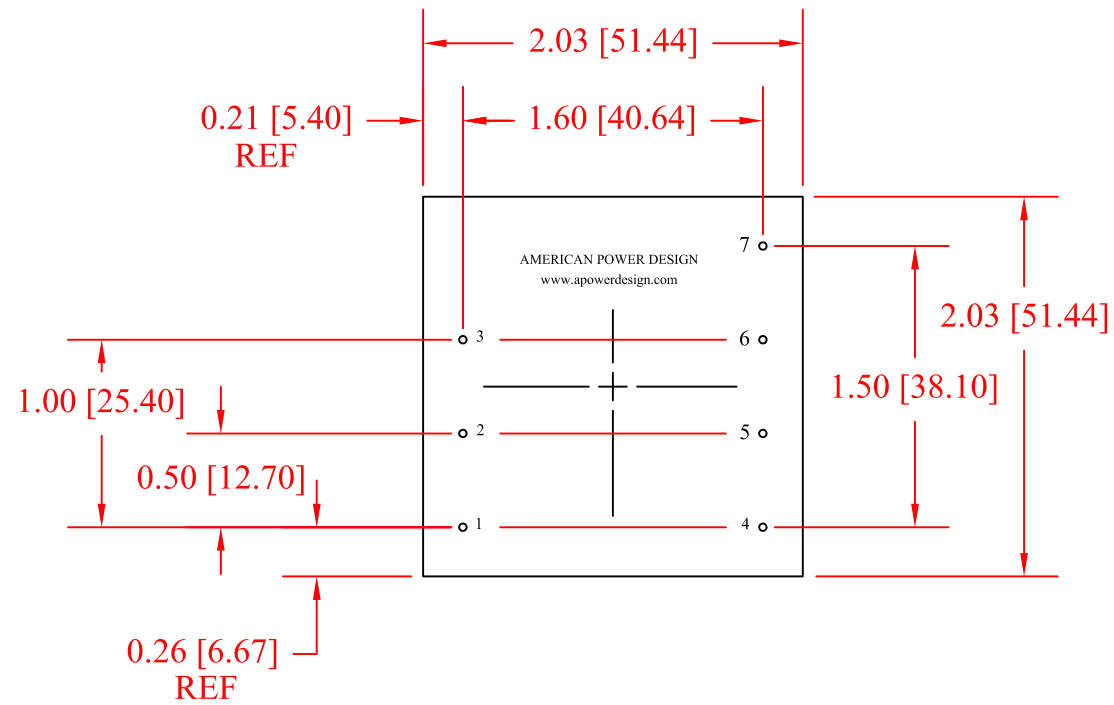

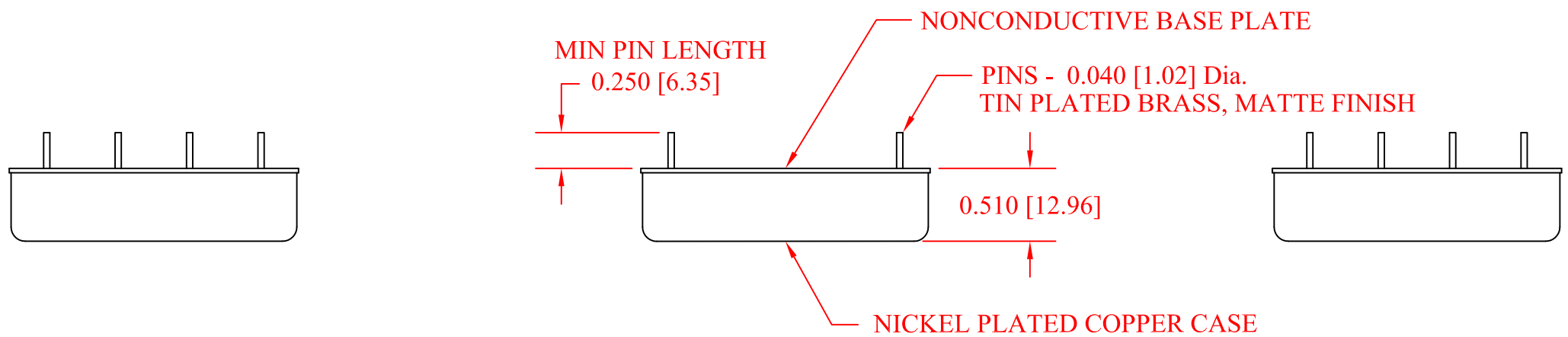

PIN #	SINGLE	DUAL
1	- INPUT	- INPUT
2	ON/OFF	ON/OFF
3	+ INPUT	+ INPUT
4	NO PIN	OUTPUT 2 +
5	NO PIN	OUTPUT 2 -
6	OUTPUT 1 -	OUTPUT 1 -
7	OUTPUT 1 +	OUTPUT 1 +

UNLESS OTHERWISE SPECIFIED
DIMENSIONS IN INCHES [MM]
TOLERANCES
FRAC = ±1/64 .XX = ±.05
.XXX = ±.005 ANGLE = ±1°0

STANDARD
APPROVAL

DWN	CDL	02/04	DATE
CHK	NJN	02/04	DATE
CH DR			DATE
COG ENG			DATE

MATERIAL
FINISH

American Power Design

TITLE
X10 Dimensions

SCALE	SIZE	FILE	REV.
1:1	B	x10_cadd	-

SHEET 1 OF 1
DO NOT SCALE PRINT